ST. ANTHONY FALLS HYDRAULIC LABORATORY
UNIVERSITY OF MINNESOTA

Project Report No. 34

AN EXPERIMENTAL CHANNEL FOR THE STUDY OF AIR ENTRAINMENT IN HIGH-VELOCITY FLOW

Submitted by
LORENZ G. STRAUB
Director

Prepared by
OWEN LAMB

November, 1952

Prepared for
OFFICE OF NAVAL RESEARCH
Department of the Navy
Washington, D.C.

Under Office of Naval Research Contract N6onr-246

PREFACE

Contract N6onr-246, Task Order 6, between the University of Minnesota and the Office of Naval Research, specified that the St. Anthony Falls Hydraulic Laboratory:

> Conduct research on the basic mechanisms whereby atmospheric air is entrained into water by the relative motion between the two fluids.

This report is a description of a large variable-slope flume installation designed and built at the St. Anthony Falls Hydraulic Laboratory to further the experimental phase of the air-entrained flow study. The design of this specialized testing facility was guided and supervised by Dr. Lorenz G. Straub, Director of the St. Anthony Falls Hydraulic Laboratory. Professors John F. Ripken and Richard B. Whittington conceived the basic design and worked with and directed the various members of the Laboratory staff who prepared detailed plans of the structure. Physical construction of the equipment was accomplished in its entirety at the Laboratory and was the charge of Frank Dressel, Shop Foreman. This report was reviewed critically by Reuben M. Olson, Research Associate, and was adapted for publication by Professor Loyal A. Johnson. Preparation of the manuscript was by Marilyn F. Larson.

In accord with rules and instructions of the Office of Naval Research this publication is identified as a Technical Report. The applicable Research and Development Board number is NR-062-052.

ABSTRACT

A large open channel designed for the study of self-aeration of high-velocity flows has been built and installed at the Laboratory. This 50-ft channel has a cross section 12 in. deep and 18 in. wide and can be set at any slope from horizontal to vertical.

The slope is controlled by means of a hydraulic system and is indicated with a servo system with an accuracy of 1/4°. The initial flow depth in the test flume is controlled by an electrically driven sluice gate with a rounded entrance located at the head of the flume. This depth can be controlled and indicated within 0.001 ft throughout its 1/4-in. to 6-in. range. The water discharge is regulated by two hydraulically operated gate valves in the supply lines and is measured within an accuracy of about 1-1/2 per cent.

The inlet region is designed to produce an initially uniform jet at terminal velocity, and the flume is long enough to permit the aeration process to reach equilibrium for a range of discharge at all slopes.

The selection of these flume dimensions and performance limits of the installation are explained from present knowledge of aerated flows and from aerated flow measurement requirements.

CONTENTS

LIST OF ILLUSTRATIONS

AN EXPERIMENTAL CHANNEL
FOR THE STUDY OF
AIR ENTRAINMENT IN HIGH-VELOCITY FLOW

I. INTRODUCTION

Air entrainment or the self-aeration of high-velocity, open-channel flow is influenced by channel slope, depth of flow, roughness of the channel surface, inlet conditions, and other factors contributing to the turbulence and tumultuousness of the flow. Experimental measurements of air-entrained flows depend upon special equipment and techniques because the flows are essentially movements of undetermined, nonhomogeneous mixtures of air and water which do not satisfy the requirements for successful operation of conventional instruments.

The occurrence of aerated open-channel flows on large existing hydraulic structures such as steep chutes and spillways is often accompanied by the distracting influences of nonsymmetrical inlet conditions, breaks in grade, deflection of the flow by bends and curves, nonuniform reaches of the flow causeway, and changing characteristics of the boundary surfaces. It is important in a general analysis of aerated flow to control or eliminate these secondary effects and to present a considerable range of the primary variables of channel slope, boundary roughness, and depth of flow or discharge. After the behavior of the individual variables has been determined, the process of synthesis necessary for design work on hydraulic structures will be facilitated.

The production of aerated open-channel flows under controlled conditions is characterized by the large and versatile equipment necessary to achieve an appreciable range of the basic variables governing air entrainment. Ordinary laboratory flumes may have variable slopes, well-designed inlets, and precise control apparatus; but unless they have been especially designed for the study of air entrainment, the range of slopes, the inlet capacity and head, and the free reach of open channel over which self-aeration must occur fall far short of requirements for the extensive experimental program needed in order to further knowledge of this subject. Hence, the experimental phase of air-entrainment study demands not only special instruments but also a special testing facility or channel. A high-velocity channel built in the St. Anthony Falls Hydraulic Laboratory for the study of air entrainment is described in this report.

II. CHANNEL REQUIREMENTS FOR AIR-ENTRAINMENT STUDY

The paucity of reliable data for flows in open channels at slopes greater than those commonly referred to as "flat slopes" has compelled extensive checking of spillway and flume design by model studies. However, similarity of air-entrainment phenomena between prototype and a model built to any feasible scale ratio cannot be expected. In practice, self-aeration of flow is rarely observed on model-size structures although it may be a dominating factor on the geometrically similar prototype.

The actual occurrence of self-aeration in the flow is the first performance requirement of a channel for air-entrainment study. Since self-aeration does not take place on diminutive model structures, the determination of the smallest channel which will still present valid entrainment characteristics for experimental study is pertinent. Excessive channel dimensions greatly magnify the problems of slope control, water supply, and structural support.

Criteria for selection of channel size are available from observations made on large hydraulic structures [1]* where it was proposed that the onset of entrainment in two-dimensional flows occurs where the turbulent boundary layer from the channel bottom intersects the flow surface. Thus the length of flume required is governed by the depths of flow which are to be studied. From the point where entrainment commences, a considerable length of additional channel is needed to allow a fully developed, entrained flow.

A rectangular flume section is geometrically similar to most practical steep-gradient structures and also lends itself most easily to two-dimensional analysis at low-flow depths. Flume breadth selection is also dependent upon flow depths to be used. To retain an essentially two-dimensional region at the flow centerline, it is imperative that any aeration in this central portion be supported from the turbulence generated at the channel bottom and not from a junction of the entrainment regions supported by turbulence originating at the sidewalls.

Once an air-entrained flow sufficiently large for detailed study has been established, the general usefulness of the flow for either analytical

---

*Numbers in brackets refer to references listed on page 24.

inspection or for direct design reference is determined by the control, definition, and variation of the flow components possible with the channel installation.

Since flume length restrictions preclude allowing acceleration of the flow from rest to terminal velocity for the set slope and discharge, the flow must be jetted at the flume inlet at approximately terminal velocity. With a jetted inflow, self-aeration conditions for various slopes and discharges can be compared and analyzed most effectively with an initially uniform velocity distribution. The rearrangement of velocities accompanying the growth of the turbulent boundary layer can then be defined.

An extensive variation of channel slope is desirable for a comprehensive air-entrainment study, but with every change in slope care must be taken to insure against alteration of the inlet geometry and flow symmetry.

Support structure, control and indicating mechanisms, water supply, and facilities for flow measurements and photographic studies are all necessary appurtenances to an air-entrainment flume but do not necessarily influence its hydraulic characteristics.

III. LOCATION OF HIGH-VELOCITY CHANNEL

A. Original SAF* High-Velocity Channel

Air-entrainment studies were originally initiated at the St. Anthony Falls Hydraulic Laboratory shortly after completion of the Laboratory building in 1938. A high-velocity channel was constructed which was used extensively in the determination of air distributions in open-channel flows for various slopes, discharges, and boundary roughnesses. The flume was rectangular in section, had a length of 50 ft, a breadth of 1 ft, and a depth of 10 in., and could be adjusted to various slopes ranging from 0° to 44° with the horizontal. Three types of channel roughness were employed: a painted steel surface, a sand-coated surface, and a surface obtained by lining the flume with two layers of expanded steel mesh. A more complete description of this channel is contained in a doctoral thesis by DeLapp [2], who used a number of the data obtained with the channel to illustrate his analysis of the air concentration distribution.

---

*St. Anthony Falls.

B. Description of Site

The St. Anthony Falls Hydraulic Laboratory has available large quantities of water for all experimental studies at the natural 50-ft head of the falls. Both the headwater and tailwater pools of the falls are extended into the Laboratory as canals. Variation in available head is negligible because of the long wier control at the falls and the large inlets for the Laboratory water supply

The first high-velocity channel at the Laboratory was located in a large and open vertical shaft within the main building referred to as the turbine pit. Free vertical height of the turbine pit extends from the ceiling elevation of the balcony floor to the tailwater elevation of the river, a distance of 66 ft at normal tailwater elevation. Free and ample access from the turbine pit to a large room at the lowest elevation of the Laboratory is provided by a concrete arch between the two areas. At the lower slopes the high-velocity channel extended out through the arch, while at the higher slopes the channel was withdrawn back into the turbine pit area.

This same location in the Laboratory was selected as the most desirable site for the new high-velocity channel. It was planned to disassemble the older channel and to rearrange miscellaneous supply piping to other equipment in order to provide the necessary space in the turbine pit.

C. Access to Supply and Waste Canals

The canal extensions of the headwater and tailwater pools of the falls into the Laboratory are ideally located to service equipment located in the turbine pit.

The main supply canal is an elevated reinforced-concrete flume 8 ft wide, over 300 ft long, and sufficiently deep to accommodate any seasonal fluctuation in the headwater pool of the river. At the normal elevation of the headwater pool, the static water depth in the supply canal is about 5-1/2 ft. Gates and control devices are available at both ends of the canal for flow regulation or for any dewatering that may become necessary for installation or maintenance of equipment. A large steel plate forms the sidewall of the supply canal at the location of the turbine pit, facilitating design of any outlets at that location. The depth of water available in the supply canal is sufficiently large to prevent gulping of air during heavy flows into any of the offtakes that are located near the floor of the canal.

The tailrace extending into the Laboratory from the tailwater pool of the falls is a straight canal in the reach from the outer wall of the Laboratory to its terminus at the wall of the turbine pit opposite the arch. The arch is directly over this 10-ft wide canal and is so aligned that the maximum elevation of the arch can be utilized for the necessary movement of the high-velocity channel accompanying slope changes. At normal tailwater elevations, the water stands at a depth of 4-1/2 ft throughout the length of the tailrace with the exception of that portion in the turbine pit where the canal floor drops off to a considerably greater depth. The orientation of the tailrace with respect to the turbine pit and the arch is particularly favorable because the high-velocity channel can be built directly over the tailrace, thereby providing immediate disposal of the flow at any slope of the channel. The depth of water in the tailrace is sufficient to provide effective dissipation of the energy in the high-velocity streams discharged into it.

D. Physical Limitations on Size and Movement

With the advantages of control and versatility obtained by conducting an experimental study in a laboratory, there are associated limitations on physical size and capacity of the experimental facilities. Although size is important in an experimental air-entrainment study where similarity parameters have not been defined, there is still the necessity of first outlining the influences of changes in slope, depth of flow, boundary roughness, and distortion of the velocity profile on the entrainment characteristics of the flow. Maximum benefit can be gained from the channel by building it as large as possible while retaining full control and variation of those characteristics which are expected to influence the aeration process.

The back wall of the pit, the crown and face of the arch nearest the pit, the floor of the tailrace, and the mezzanine ceiling form physical boundaries which limit the size and movement of a variable-slope channel located in the turbine pit.

A channel approximately 50 ft in length can be fitted into this space (Fig. 1) and turned through the complete 90° angle from horizontal to vertical. A significantly larger variable-slope channel built in an unconfined area would present problems of control and structural supply far out of proportion to any added benefits that could be expected from the increased physical size.

IV. SELECTION OF FLUME DIMENSIONS

A. Flume Section

A flume of rectangular section was selected for the basic experimental study of air entrainment because:

1. It presented the simplest construction and structural design of the flume.
2. It could be used to approximate two-dimensional flows at the lower-flow depths.
3. A satisfactory design of headbox and inlet gate could most easily be accomplished for the rectangular section. Considerable complexity would be imposed upon these components if any other section were used.
4. Computations with the basic experimental data would be facilitated. Subdivision of a flow cross section for integration of pointwise measurements to obtain bulk characteristics of the flow would have to be more detailed for any other section.
5. Where air entrainment is a major consideration, most hydraulic structures are either rectangular in section or are essentially two-dimensional because of their relatively great width.
6. Comparison of experimental data with data from other air-entrainment studies would be more direct in so far as all reported measurements of proposed experimental programs are restricted to flumes of rectangular section.

Because of the advantages of a rectangular flume, no other section was actively considered. However, as a better understanding of the problems evolves, reasons for additional studies with trapezoidal or some other section may become apparent.

B. Depth of Flow

The selection of flow depths that are to be used during the experimental program directly affects the width and length of the flume necessary to achieve significant aeration conditions. Hence, the upper limit of flow depths that can be used is imposed by the practical limitations that must be made on the flume dimensions of length and width. The lower limit of flow depths that can be effectively employed is determined by the ability of the measuring instruments to subdivide the flow section into individual points or regions of measurement and thus define the vertical distribution of the variable being measured.

The two basic instruments specifically designed for this air-entrainment study are the air concentration meter and the SAF velocity meter which are described in separate reports [3] and [4]. The air concentration meter measures electrically the mean air concentration in a 1/4-in. square filament of flowing air-water mixtures. Thus, measurements in a vertical of the flow can be spaced 1/8 in. apart for effective definition of the air concentration distribution. Fringe effects from the instrument invalidate readings taken when the center of the measured filament is closer than 5/16 in. from the channel floor. The velocity meter detects and times electrically the passage of a diminutive, injected slug of saline solution past two electrodes spaced 3 in. apart along a flow filament. The exposed tips of the electrodes are approximately 1/32 in. square, dimensions which allow good differentiation of the velocities at points spaced as little as 1/16 in. apart in a vertical. Ordinarily velocities cannot be obtained in the upper 3/4 in. of the flow because of injection difficulties. Thus, from the stated measurement intervals of these instruments, fair determinations of air concentration and velocity distributions can be made in aerated flows having a total depth of only 2 inches. The distributions can, however, be made more detailed with every increase in flow depth.

Since the instruments permit effective definition of flows as small as 2 inches in total depth, an upper limit of flow depths could be assigned which would give a sufficiently large range of depths and discharges and would still permit a feasible limitation on the size of the installation. With an initial water depth of 6 in. jetted at the flume inlet at terminal velocity for the set channel slope, the magnification of the depth due to aeration on an available 50-ft reach of channel would result in a total depth appreciably less than 12 inches. Initial water depths of 4 in. would considerably more than double the minimum discharges that could be effectively measured by the instruments, thus presenting a satisfactory discharge range for the experimental study. Consequently, the maximum inlet gate opening was fixed at 6 in. and the height of the channel sidewalls at 12 in., thereby providing sufficient freeboard for all aerated flows that might be encountered. Channel breadth and length determinations providing both maximum aeration and a two-dimensional region around the flow centerline at the discharge end of the channel were based on a 4-in. inlet depth of water.

C. Flume Breadth

The restriction of experimental measurement, computations, and analysis to a two-dimensional region of open-channel flows represents a considerable simplification of work and techniques and in a sense makes the results on a particular channel more generally applicable to associated problems on other installations. Strict two-dimensionality would, of course, occur only at very large ratios of channel width to depth where the presence of the sidewalls could not be felt in any manner over the large central region of the flow.

However, for our purposes a region of the flow may be considered two-dimensional if there is no appreciable change in the profiles of air concentration or velocity at successive intervals across the region, which implies that the turbulent boundary layers from the sidewalls have not yet infected the region. This distinction is important in entrained flow analysis because observation has shown that aeration begins prematurely at the sidewalls of flumes because the turbulent boundary layer from the sidewalls is initially near the flow surface. The aeration then spreads outward into the flow following the growth of this sidewall boundary layer. Thus, the channel width must be much greater than the depth of flow in order to allow full development of the turbulent boundary layer from the channel bottom and sufficient time for aeration to occur in the central region of the flow before the disturbing encroachment of aeration from the direction of the sidewalls occurs. It is, of course, realized that a small jet contraction will be present in the flow as long as the sidewall boundary layers are still growing, so that the entire flow cannot be considered two-dimensional; nor can it be considered uniform in the sense that traverses across successive stations of the channel would show identical distributions of velocity and air concentration. Finally, for any feasible ratio of flow width to depth, the commonly accepted open-channel length parameter of hydraulic radius will be appreciably smaller than the flow depth which represents the mathematical limit of the hydraulic radius in the case of two-dimensional flow.

A flume width of 18 in. preserves a defined two-dimensional region extending from 2 in. to 4 in. to each side of the flow centerline at the end of a 50-ft flume length when an initially uniform velocity distribution is assumed for the design 4-in. water depth at the flume inlet.

D. Flume Length

The requirement for flume length in an experimental study of air entrainment is greatly reduced by jetting the water at the inlet at terminal velocity for the slope and discharge. The flume reach necessary for flow acceleration is thereby dispensed with and provision can be made to obtain constant conditions of inlet velocity distribution and inlet geometry for all slopes of a practical-sized, fully variable-slope channel. Both the old and the new high-velocity channels at this Laboratory were designed to operate with jetted inlet flows.

The point where the turbulent boundary layer from the channel bottom intersects the flow surface can be satisfactorily forecast for a given set of initial flow conditions. However, after this junction (assumed necessary but not sufficient for the initiation of self-aeration) has been established, there remains a large uncertainty concerning the additional length of flume necessary for occurrence of maximal conditions of aeration. The maximal aeration is defined as the state where the flow is surrendering as much air as it is entraining, thereby establishing a uniform condition of total aeration at successive stations along the flume. The analogy can be made to a sediment-carrying stream over a channel reach where no resultant deposition or degradation occurs although the individual particles being transported by the stream are continuously being interchanged with particles in the bed.

Chief assurance that maximal aeration would occur at the design depths in the feasible 40-ft to 50-ft length of channel was obtained by observation of flow on the older high-velocity flume. Data obtained with this older flume indicate that maximal aeration on a painted surface will occur from 30 ft to 50 ft from the flume inlet at most slopes if the initial jetted depth of flow is between 2 in. and 4 inches. At greater initial depths of flow, the total air concentration of the flow was still increasing at the station 50 ft from the inlet.

On the basis of all the aforementioned considerations, a rectangular flume section was chosen for the experimental channel shown in Fig. 1. The dimensions were fixed as follows:

Flume Width - 18 in.
Flume Depth - 12 in.
Flume Length - greater than 45 ft.
Flume Slope - Entire quadrant from horizontal to vertical.
Maximum Opening of Inlet Gate - 6 in.
Flume Surfacing - Initially painted steel to be followed at a later date by a definitely rough sand surfacing.

V. PLAN OF CHANNEL STRUCTURE

A. Movement of Flume

Near the extremes of the desired 90° range of slopes, a 50-ft long flume could be fitted into the turbine pit area at several different locations. Photographs of the channel at low and high flume slopes are included as Figs. 2 and 3, respectively. At many of the intermediate slopes, however, this length of flume could only be fitted into the available space in a single fashion. Successive possible positions of the flume, indicated with each incremental increase in slope, outline the movement that must be incorporated in the design of the supply, support, and elevating structure to obtain continuous and direct changes from one flume slope to another. The required movement could be achieved in a variety of ways with telescoping supply pipes, interlocking drive mechanisms, or pivotal support devices; but most of the arrangements considered became excessively complicated or demanded undue attention and assistance for the routine procedure of changing slope.

The double-pivot arrangement selected has the advantages of mechanical simplicity, continuous and positive action throughout the slope range, maximum spatial utilization of available water supply head, and freedom to design the flume inlet and water control features independent of slope control. The main water supply conduits, labeled downcomers and monitor arms in Fig. 4, serve a dual purpose in that they are also the chief structural supports for the flume. The inlet end of the flume is constrained to move vertically along the downcomer tracks by the track rider wheel assemblies which attach to the flume body at the inlet station. A track rider wheel assembly consists of a gimbal and pin arrangement (Fig. 5), which permits the full movement accompanying a change in slope or transverse flume alignment and prevents support of any moment that might result from small misalignments in the supporting structure. A slotted race for one of the pins in these assemblies allows a 3-in. variation in the distance between the face of the tracks and the brackets attached to the flume. This added freedom permits the channel to be pulled down to a horizontal slope from the minimum 7-1/2° slope allowable when merely extending the main support cables. The complete force system of the structure can be determined as long as there is a definite pull outward from the downcomers by the flume at all slopes and at all conditions of water loading. Any backward movement of the pin in its slot would indicate a reversal of force at the track rider and the imminence of a possible unfavorable loading of the structure. The position of this pin is under surveillance during all slope changes to insure against damage to the channel resulting from any probable jamming or sticking failure in the entire assembly.

The necessary outward pull of the flume from the rider track is produced by the overbalance toward the downstream end of the flume. With no water loading in the entire flume assembly, the longer downstream end is heavier; but when water is in the underflume conduit, the weight advantage is shifted to the portion of the flume upstream of the pivot axis. This overbalance of weight on the upstream side is compensated by the turning moment developed by the main cable's tension force when applied to large quarter-elliptic cams at the flume pivot location. These cams provide the greatest moment arm for the cable force at the lowest flume slopes and proportionally less at larger slopes. Connection of the cables to the flume is shown in Fig. 6. The turning moment from the cable force and the cam connection is also increased at the lower slopes because the lower of two slopes requires the greater cable tension in this structure. There will now be a considerable overbalance of the flume in the downstream direction when there is no water loading. This must be compensated by the vertical component of the outward pull of the flume away from the downcomers

The main support cables are 7/8-in. diameter wire rope. The leads from the cams on each side of the flume extend upward toward the tower sheave assembly at the top of the downcomers. Between the tower sheave assembly and the flume attachment a compensator sheave is included in the cable system to balance the load to either side of the flume structure. Turnbuckle adjustment of cable length can be made at the compensator sheave attachments. After the cables pass over the tower sheaves, they proceed directly downward back of the downcomer pipes to the long hydraulic cylinders which are part of the flume-elevating mechanism. Maximum cable tensions, totaling 21,500 lb for the two wire ropes, are experienced at the lowest slope (7-1/2°) which the flume assumes in its normal movement.

A considerable loading is placed on the monitor arms at all flume slopes. At the higher angles the major weight of the flume is supported directly and at the lower angles the horizontal component of cable tension must be balanced. These loads must be transmitted through the same pivot joints, located at each end of the monitor arms, which are required to pass the water supply. Consequently, these joints had to be made free to rotate, watertight, and structurally safe. Adjustment was also furnished at the joints to correct any transverse misalignment of the flume and thus prevent the undesirable situation of working with a test flow which is slightly deeper at one sidewall than it is at the other.

B. Geometry of the Supply Conduits

The supply conduits are oriented to form the structural support for the flume and to conduct the water to the inlet of the flume in a manner that will facilitate design of an inlet headbox. The path of water from the Laboratory's supply flume to the flume headbox is somewhat indirect and has several abrupt transitions. However, the head losses that occur in the conduits are tolerable because the areas of the respective conduits are sufficiently large to restrict flow velocities to less than 15 fps in the smallest section with the largest design water discharge through the system of 20 cfs.

Water is drawn from the supply flume through slightly rounded inlets by two horizontal 12-in. diameter lines which span the 11-ft distance from the supply flume wall to the main downcomers. The inverts of these pipes are 5 ft below the normal headwater elevation in the supply flume. All conduits of circular section in the supply system are 11-3/4-in. ID by 1/2-in. wall steel pipe. A right-angle welded connection between each horizontal supply pipe and its respective vertical downcomer forms a miter bend which directs the water downward into the downcomer.

Forty-one ft of each of the circular-section downcomers are utilized for water passage. Near the bottom of the downcomers, as can be seen in Fig. 7, the water is abruptly offset through 12-in. gate valves to the monitor arms of rectangular section with inside dimensions 6 in. by 18 inches. Each section is again divided by 1/4-in. reinforcing plate extending the length of the monitor arm. Offsets of 8-1/2° in the monitor arms, 2-1/2 ft from either end, serve to align the bearing surfaces on each end so that watertight, flexible joints can be installed at both ends of the monitor arms. The mean flow path through each monitor arm is approximately 20 ft long.

The flow transition from the 18-in. high monitor arms on each side of the flume to the 18-in. square underflume conduit is made through a 14-3/4-in. diameter structural spacer cylinder that extends the 29 in. from one monitor-arm bearing surface to the bearing surface on the opposing monitor arm. The position of this spacer cylinder is shown in Fig. 8, a photograph of the channel structure before the attachment of the flume section. The inflow from the monitor arms enters through the open ends of this cylinder, and the outflow into the underflume conduit escapes through eight 2-1/2-in. by 19-in. slots cut in the cylinder. A bulkhead in the underflume conduit just beyond the spacer cylinder prevents the entry of water into this conduit in the downstream direction of the flume.

Hydraulically the spacer cylinder serves to break up any large-scale flow variations or sinuosity that might be caused by unequal supply from the monitor arms and that persist up to the flume headbox. At low discharges the total water supply can be drawn through one side of the supply structure without any noticeable effect on flow symmetry at the flume inlet.

The 18-in. square underflume conduit furnishes a passage approximately 20 ft long for the water supply directly under the flume. The 3/4-in. plate which is the floor of the open-channel flume in this reach serves also as the top of the underflume conduit. This approach of the water supply to the inlet of the flume is, of course, constant in direction with respect to the flume at all slopes. The flow in the underflume conduit will have a mean velocity less than 9 fps at the highest water discharge, thereby providing sufficient margin for flow contraction at the flume inlet.

C. Headbox and Gate

The headbox at the flume inlet forms the flow transition from the end of the supply conduit to the open-channel streams that will be studied. At the end of the underflume conduit the flow is directed opposite to the downstream direction of the flume and is at a much lower velocity than is ultimately required. Thus the headbox must turn the flow through 180° and accelerate it uniformly to the jetting velocity demanded at the inlet. Perhaps optimum flow quality at the inlet would be attained by turning the flow at its slowest velocity and then accelerating it in a single step with a large symmetrical contraction at the inlet. However, this scheme would lead to an extremely large and cumbersome headbox, which would seriously shorten the available flume length.

The headbox shown by sketch in Fig. 9 was designed to place equal emphasis on the turning and acceleration of the flow and on compactness. The contraction of the flow takes place in two steps--one constant reduction of the flow section from 18 in. square to 18 in. wide by 15 in. high, and one larger variable contraction at the flume inlet. The 3-in. initial reduction in section makes it possible to use symmetrical 90° bends and also provides space for a more nearly symmetrical contraction at the inlet.

The two 90° miter turns have individual vane banks whose selection was based on recent flow diversion studies at this Laboratory [5]. Each vane bank may be withdrawn through access slots at the corners of the headbox for inspection, cleaning, or alteration.

The inlet gate is a heavy sluice gate cantilevered from its mountings at the top of the flume so that there are no travel slots or guides to disturb the inlet flow. Leather seals recessed in slots in the sides of the gate prevent any disconcerting leakage between the sides of the gate and the sidewalls of the flume. The lip attached to the bottom of the gate approximately mirrors the final curve at the floor of the flume, thus contributing to the symmetry of the contraction. The lip also insures a full contraction of the flow at the inlet so that the gate opening is exactly the depth of flow at Station 0 of the flume.

The overall area contraction of the flow through the headbox and gate is 3:1 at maximum gate opening and from 9:1 to 4.5:1 at the depths of flow which will be most extensively used. A complete Pitot tube traverse of the flow at the flume inlet with a 3-in. gate opening showed the velocity distribution to be uniform throughout the section. Measurements were made as close as 3/16 in. to all boundaries with no deviation greater than 2 per cent from the mean velocity except in the bottom corners where slightly smaller velocities were encountered. No mean transverse components of flow were evident. This flow quality is considered satisfactory to establish initial open-channel flow conditions for experimental study and for analysis.

D. Water Supply for Higher Heads

Subsequent to construction of the high-velocity channel, higher-head service mains were installed in the Laboratory. An increase in available head of the water supply to the high-velocity channel permits extension of the experimental program to greater flows at the higher slopes since faster jetting velocities can then be realized at the flume inlet. These high-head mains consist of two 20-in. diameter pipes suspended above the water level in the main supply channel and extending the full length of the channel. At present the pumped inflow into these pipes is furnished by two 12-in., single-stage, axial-flow pumps at the Laboratory gatehouse site. Complete four-speed motor controls for each pump are located in the gatehouse.

Two 12-in. offtakes near the ends of these higher-head supply mains were bridged directly over to the supply lines of the high-velocity channel. A 12-in. DeZurich three-way plug valve was inserted in each of the horizontal supply pipes of the channel, and the respective offtakes from the high-head mains were attached to complete the Tee connections. By turning the plug valve hand levers through 90°, the water supply to the high-velocity channel can be changed from the supply channel to the higher-head supply mains. Platforms at the level of the mezzanine floor were built to provide easy access to these valves. This bypass and valve installation and the terminals of the high-head mains are shown in the photographs in Fig. 10.

The available head added to the high-velocity channel supply by this installation varies approximately linearly from 25 ft at 13.5 cfs down to 0 ft at 19.6 cfs.

E. Structural Considerations

Complete and detailed stress analysis of every component of the entire structure was necessary before the design could be fixed and construction started. Very little dependence was placed on exterior forces or moorings. In fact, the only exterior structural ties outside of the foundation were at the water supply inlet where the applied force is small because of the long moment arms presented by the downcomers, and at the mezzanine floor where a precautionary tie was made to counteract any unexpected transverse instability of the downcomer columns. The maximum vertical loading at the base of the downcomers is 85,000 lb distributed to give an average loading of 25 psi. This foundation is on bedrock.

The flume section, composed of the open-channel flume and the underflume conduit and support members, is all welded construction of standard structural steel plates and channels. Extreme care was exercised in the fabrication of this member to avoid any twisting or misalignment. Over 400 lb of welds were added to the flume section in its fabrication into a unit without serious deflection. When mounted on the monitor arms, the flume's weight is entirely supported at this one pivot, and a vertical-position restraint is applied at the location of the track rider assembly. At maximum loading conditions (horizontal slope and flume filled with water), the maximum downward deflection of the cantilevered downstream end is less than 1/2 in. and the maximum upward deflection at the critical point 6 ft upstream of the pivot is 0.025 inch. Variation in plumbness of the flume sidewalls is less than 1/8 inch in the 12-in. depth throughout the flume length at all different conditions of loading. Transverse bending of the flume floor because of pressures as high as 80 ft of water head in the underflume conduit results in maximum deflections less than 0.01 inch. Since all flume deflections are decreased as the slope is increased, the flume essentially satisfies the specifications for a straight and true open channel throughout the range of testing conditions.

Many working stresses throughout the support structure are full allowable design stresses. However, extreme conditions of loading were considered for every component, and operational controls were carefully studied so that no static, impact, or vibrational loads which might lead to local failures could be applied.

VI. CONTROL AND INDICATING FEATURES

A. Slope Control

Changes in slope of the high-velocity flume are accomplished with a high-pressure oil-hydraulic system sketched in Fig. 11. The main support cables of the flume are attached to the rods of two single-acting hydraulic cylinders, each of which has a 22-ft stroke. Opposite ends of these cylinders are moored with pin and clevis to the foundation structure at the base of the downcomers. Direct alignment between the cylinders at all rod extensions with the cable directions from the sheaves on top of the downcomer columns is thus furnished. Each of the two Hydro-Line cylinders has a 5-in. honed bore, a 1-3/8-in. diameter rod, and chevron packings on the piston and on the rod seal. The total length of each of the cylinders is composed of three shorter flanged lengths which are separately matched. Working pressures of 750 psi are specified with allowable maximum pressures as high as 1000 psi. At the cylinders' end flanges, 1/2-in. NPT ports and cushion adjustments are provided. The total 44-ft adjustment in support cable length provided by the cylinders is sufficient to change the flume slope throughout the entire range from horizontal to vertical. However, positive rod stops have been installed on the cylinders to prevent slopes less than 7-1/2° from being set by cable extension alone. Unequal loads on the two cylinders are prevented by the compensator sheave in the cable assembly.

Motivation for the hydraulic cylinders is provided by a Vickers hydraulic unit consisting of a reservoir, a V134 vane pump, a 10-hp electric motor, and attendant strainers, gages, relief valves, and return piping. The output from the vane pump is connected through a variable-pressure relief valve to a 3/4-in., 1500 lb, Quick-as-a-Wink, three-way valve. This three-way valve features a closed center position and U-type cup packings which prevent any leakage from the cylinder port to the exhaust port. The flume can be suspended indefinitely with the load on this valve without any change in slope due to leakage.

A single line of 3/4-in. high-pressure steel tubing leading from the cylinder port in the three-way valve is divided into two 1/2-in. steel tubing leads at the channel foundation which then are led up to the ports in the rod ends of the main hydraulic cylinders. Both supply and return flows from the rod ends of the cylinders go through these lines.

The total capacity of the oil reservoir in the pump unit is 35 gal with an allowable margin for variable storage of less than 10 gal. The extra storage necessary because of the large single-acting cylinders is in the cylinders themselves. Low-pressure piping from the bottom of the reservoir to the closed ends of the cylinders provides the only connections necessary to utilize this storage. Thus the only change in the reservoir tank oil level from the fully extended to the fully withdrawn position of the cylinder rods is that necessary to compensate for the volume of the cylinder rods.

The operation of increasing the flume slope consists of pushing the starting button for the electric motor and pushing the handle on the three-way valve to the "Up" position. To lower the flume it is only necessary to pull the handle on the three-way valve to the "Down" position as no power is needed for the lowering operation. The total change in slope from the horizontal to the vertical position can be accomplished in 2 min, but by means of permanently set needle valves in the oil supply lines this rate is throttled down considerably to allow full observation during movement and to permit the channel to be stopped precisely at any desired slope.

B. Slope Indicator

Continuous indication of flume slope is provided by a synchronous transmitter and receiver. Both elements are Type 5 AN specifications with mechanical dampers. The transmitter is mounted in a box on the side of the flume with a 14-in. pendulum attached to its shaft. To the receiver shaft on the main control panel is attached a 6-in. diameter dial calibrated in degrees of slope with scribed marks at every $1/2^{\circ}$. The slope can be read on the dial to $1/4^{\circ}$, the limit of sensitivity of the installation.

C. Inlet Gate Control

The flume inlet gate controls the initial flow depth in the flume and with the complete headbox forms the main influence on the flow quality at the inlet. Position of this gate is extremely critical to the water discharge and to the setting of test flows in the flume. The movement of the gate is normal to the floor of the flume with travel from a 1/4-in. opening to an opening of 6 inches.

Motivation for the operation of the inlet gate is from a Boston Gearmotor located on top of the gatebox, as shown in Fig. 12. This unit has a 1/12-hp split-phase (reversible) electric motor. The two output shafts from the gear head deliver 2 lb-ft of torque at their rated speed of 172.5 rpm. Worms on the end of these output shafts drive worm gears attached to the end of 1-in. diameter threaded shafts extending downward parallel to the gate. A speed reduction of 30 through the worm and gear linkage is realized. The 1-in. diameter NC threaded shafts (8 threads per inch) extend through nuts rigidly attached to the gate. Thus the gate opens or closes at the approximate rate of 1 in. every 1.4 min. Rollers mounted on the gatebox and on the flume sidewalls above the maximum opening of the gate provide bearing points for the gate and help support the moment applied on the cantilevered gate by the water pressure in the headbox.

The slow movement of the inlet gate is desirable for the purpose of setting the gate opening precisely. The motor starting box, travel limit switches, and a test-operating switch are located at the gatebox, but the main operating controls for the gate are remotely located because the gate is fairly inaccessible at most flume slopes.

D. Gate Indicator

Gate opening is transmitted to the remote operating position by a Type 5 AN synchronous transmitter. This transmitter, also located on top of the gatebox, is actuated by the gate movement with a spring-loaded, perforated, steel float tape which is anchored to the gate and passes over a matching sprocket wheel on the transmitter shaft. A Type 5 AN synchronous receiver at the remote control station has a 6-in. diameter disk attached to its shaft. The disk is calibrated in gate opening in feet (range 0 to 0.5) with scribed marks every 0.002 ft and with the hundredths and tenths of a foot accented. The inlet gate opening can be transmitted and read accurately to 0.001 ft with this installation.

E. Water Discharge Control

The two 12-in. gate valves located, as shown in Fig. 7, in the offsets between the bottoms of the downcomers and the lower ends of the monitor arms furnish the main control of water discharge through the high-velocity channel. These valves (originally common 125-lb, rising stem, flanged, water-control valves fitted with handwheels) were converted to remote hydraulic operation in order to further facilitate the precise regulation of the flume flows from a central location. Double-acting hydraulic cylinders are mounted on top of the valve bonnets with the cylinder rods connected to the valve gates by means of short rod extensions. Each 1500-lb-test hydraulic cylinder has a 15-in. stroke, 2.12-in. bore, and 1.5-in. diameter rod. With the cross-sectional area of the rods one-half the cross-sectional area of the cylinders, it was found feasible to connect the high-pressure source to the cylinders differentially. With this type of connection there is available for opening the 12-in. gate valves the same force that is available for valve closure, thus preventing the possibility of jamming the valves shut so that they would have to be disassembled to free them. The oil hydraulic pump and the two four-way routing valves for this system are entirely separate from the slope control system. Independent operation of the two 12-in. gate valves is furnished by the two four-way routing valves in the high-pressure oil lines. In preference to a motor-driven pump, a small-capacity hand pump was employed for this valve-operating system to permit very small adjustments in water discharge while testing flows in the flume are being set.

F. Measurement of Water Discharge

Pitot cylinders mounted in the downcomers are employed as water discharge meters. These cylinders are installed about one-fourth of the distance up from the bottom in each respective downcomer. Separation of the Pitot stations from conduit bends by 30 diameters of straight pipe in the upstream direction and 11 diameters downstream assures flow centerline readings in a fairly flat portion of the turbulent velocity distributions in the downcomers. Thus Pitot readings at the flow centerline can be used to indicate water discharge with fair accuracy when calibrated over a range of Reynolds numbers.

Four 1/8-in. galvanized pipes, one from each cylinder's dynamic tap and one from each downcomer's wall tap, are strung along the turbine pit wall to the central control station for the channel. These pipes have a slight slope throughout their lengths and have no points where air would collect and be trapped. At the control station a bank of four 50-in. Meriam differential manometers is installed. For each downcomer there is one manometer which will record the entire range of discharges and another more sensitive manometer which can be used to record single downcomer discharges up to 7 cfs. Valving at the manometer station is arranged to permit either switching of manometers or flushing of manometer lines. The manometer bank is located so that it may be observed while regulating the discharge, as is being done by the observer operating the water-discharge-control hand pump in Fig. 13.

Calibration of these Pitot cylinder installations as water-discharge meters was accomplished by effecting a temporary connection from the underflume conduit to the large Laboratory weighing tanks so that all flow through the downcomers could be discharged into these tanks.

Each discharge meter was calibrated separately with flows from 1/2 to 10 cfs. Errors in the weight of discharge with these Laboratory tanks are only a small fraction of 1 per cent of the total weight measured and are entirely insignificant compared with possible errors in observing velocity heads on the liquid manometers attached to the Pitot cylinders. Thus a discharge calibration for each discharge-measuring station was obtained with an accuracy in the neighborhood of 1 per cent of the discharge passed. This accuracy is commensurate with other variables in the setting of the test flows.

G. Control Panel

A cabinet housing the channel controls (Fig. 13) is conveniently located under the turbine room arch at the same floor level where most of the experimental work is conducted. The entire length of the flume during slope changes can be observed from this location.

Hydraulic lines leading to the control station approach through a trench in the floor underneath the cabinet. Electric leads to the cabinet are through a flexible cable loop from a junction box on the wall behind the cabinet. The cabinet is on casters so that it may be rolled aside exposing the hydraulic pump installations underneath for repairs or maintenance. Pump and valve controls extending up through the cabinet are easily removed for this operation. The electric starter buttons, switches, and synchronous receivers are mounted on the vertical panel of the control cabinet. The manometer bank is immediately adjacent to one end of the cabinet but separate from it and is not disturbed when the cabinet is rolled away from its normal position.

Controls and indicating devices for the three separate operations of changing slope, altering inlet gate opening, and regulating water discharge are grouped so that any one operation can be managed from a single position.

VII. TEST PROCEDURE

A. Access Platform

That phase of the experimental program defining air concentration and velocity distributions in fully aerated flows will be conducted near the downstream end of the flume where the condition of maximal aeration will occur. The flume movement, the full utilization of the available water supply, and the effective disposal of the water after its passage down the flume are among the conditions conspiring to retain this downstream reach near the level of the turbine room floor for all slopes. Access to this lower testing region of the flume was provided by constructing a floor over the tailrace, retaining an open slot along the tailrace only slightly wider than the flume. At lower slopes the discharge from the flume falls through this slot, while at higher slopes the flume itself extends down through the slot at various locations depending upon slope. At all slopes the downstream end of the flume will be close to this floor over the tailrace so that an observer on the turbine room floor level will have ready access to the normal testing region of the flume as well as to the control panel.

Access to reaches of the flume further upstream is now difficult at all but the lowest slopes. Temporary platforms or other methods of access to the flow at these upstream stations will be devised as needed during the experimental studies. Vantage points for photographic studies of the flow are provided by the several ledges and floor levels that are in close proximity to the turbine pit location of the channel structure.

B. Experimental Measurements

Measurements in the aerated flows set in the flume are made with the aforementioned air concentration meter and the SAF velocity meter, as well as with other types of special purpose instruments. High-speed photographic studies of the flows are conducted in parallel with the experimental measurements to illustrate the experimental results and to obtain a basic insight into the flows. Although detailed descriptions of experimental testing methods and techniques are beyond the ken of this report, it is significant that the accuracy and control attainable in the experimental measurements fully justify the care and precision which characterized the planning and construction of the channel and its control features. The precise mounting and traversing characteristics of the instruments would be compromised if any appreciable undulations or irregularities had been allowed in the flume boundaries. Important measurements close to the flow boundaries would be meaningless, as would measurements in the flow, if large-scale sinuosity of the flow and inlet disturbances had not been carefully avoided. Determinations of flow surface, maximal conditions of air content, and uniform testing flows would not now be possible if laboratory methods and care had not been exercised throughout the building phase of the project.

Figures 14 and 15 are photographs of typical aerated flows that may be readily set in the high-velocity channel. The profile view of the flow in Fig. 14 was taken through a small Lucite extension that is easily clamped to the end of the steel flume section.

REFERENCES

[1] Lane, E. W. "Recent Studies of Flow Conditions in Steep Chutes." Engineering News-Record, pp. 5-7. January, 1936.

[2] DeLapp, W. W. "The High Velocity Flow of Water in a Small Rectangular Channel." Ph.D. thesis, University of Minnesota. 1947.

[3] Lamb, O. P., and Killen, J. M. An Electrical Method for Measuring Air Concentration in Flowing Air-Water Mixtures. University of Minnesota, St. Anthony Falls Hydraulic Laboratory Technical Paper No. 2, Series B. March, 1950.

[4] Straub, L. G., Killen, J. M., and Lamb, O. P. Velocity Measurement of Air-Water Mixtures. University of Minnesota, St. Anthony Falls Hydraulic Laboratory Technical Paper No. 10, Series B. March, 1952.

[5] Silberman, E. Fluid Flow Diversion by Guide Vanes in Miter Bends. University of Minnesota, St. Anthony Falls Hydraulic Laboratory Project Report No. 8. April, 1949.

APPENDIX

FIGURES 1 to 15

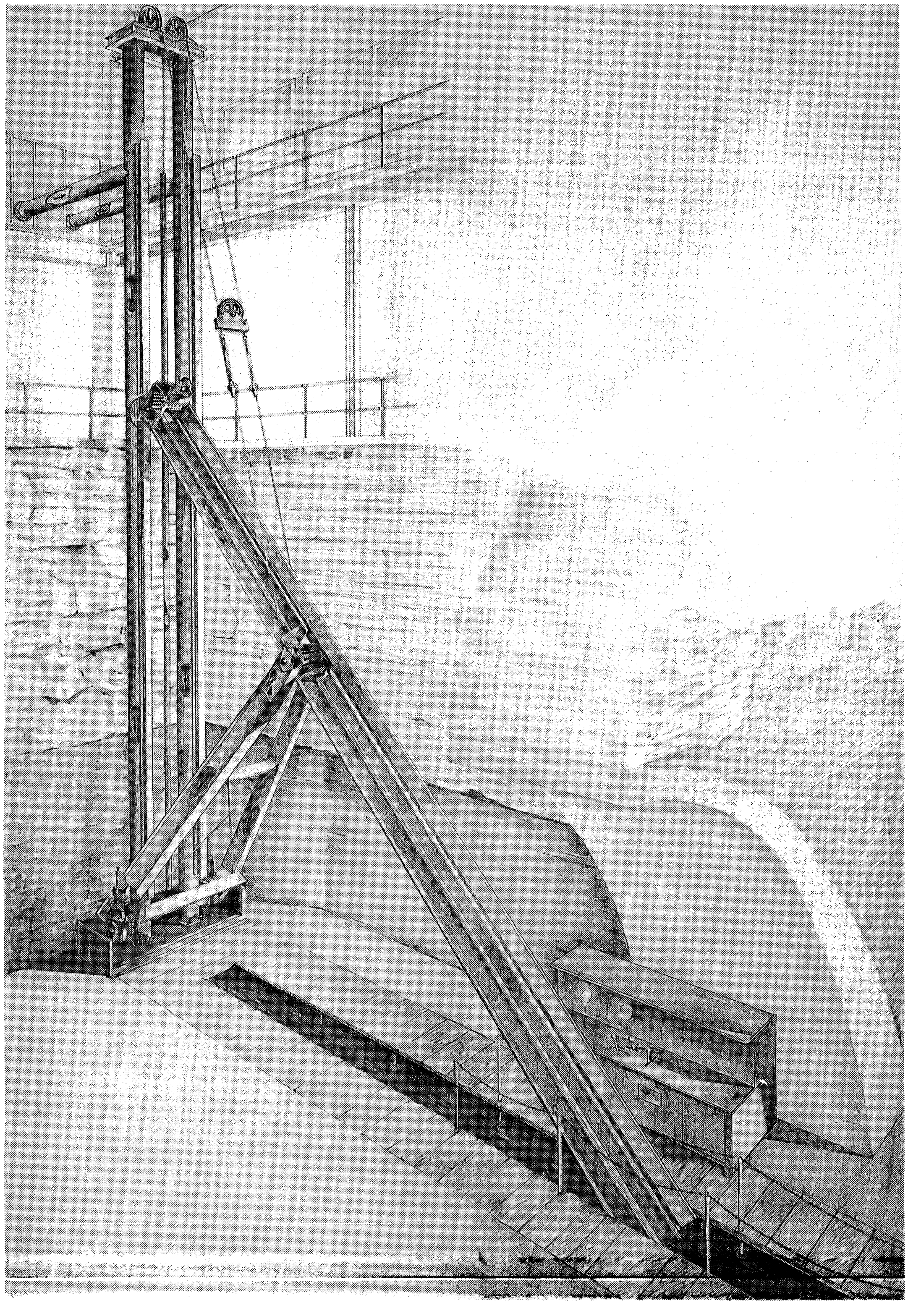

Fig. 1 – High-Velocity Channel and Control Cabinet

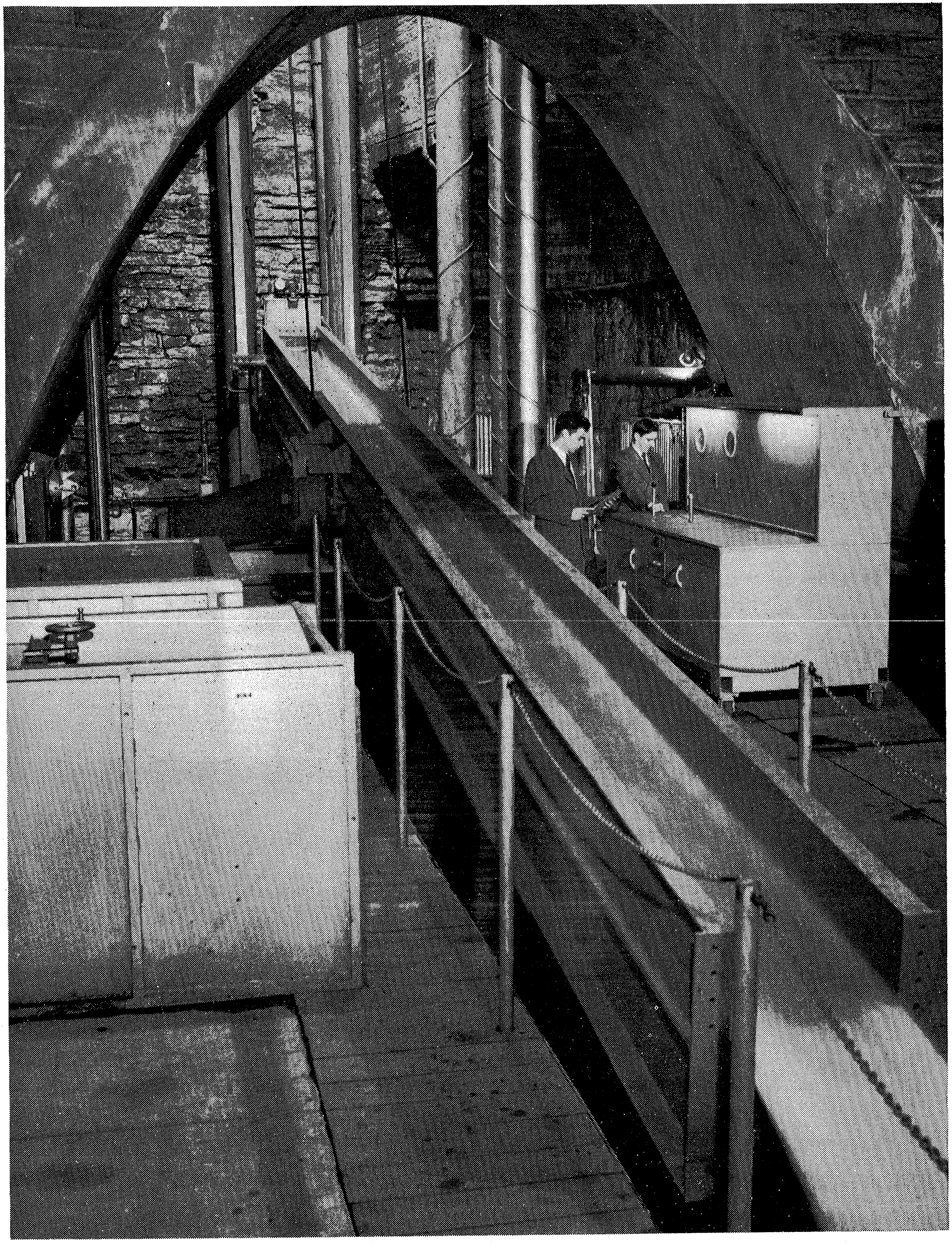

Fig. 2- Flume at 7-1/2° Slope Extends Out Over Tailrace Canal

Observers at Control Board Setting Test Flow

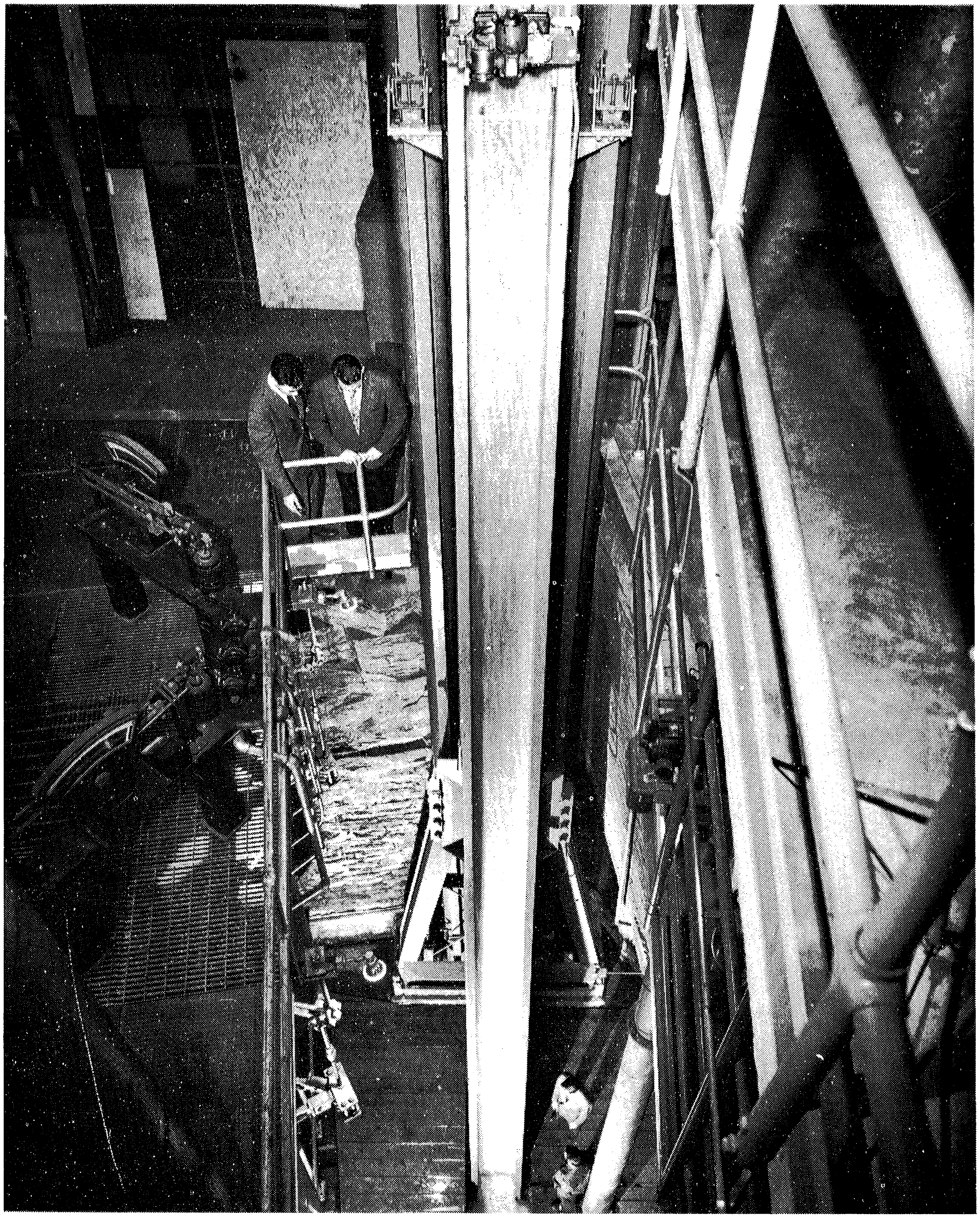

Fig. 3 - Flume at 82-1/2° Slope Crosses Four Laboratory Floor Elevations

Vantage Points for Photographic and Visual Observation Available Throughout Flume Length

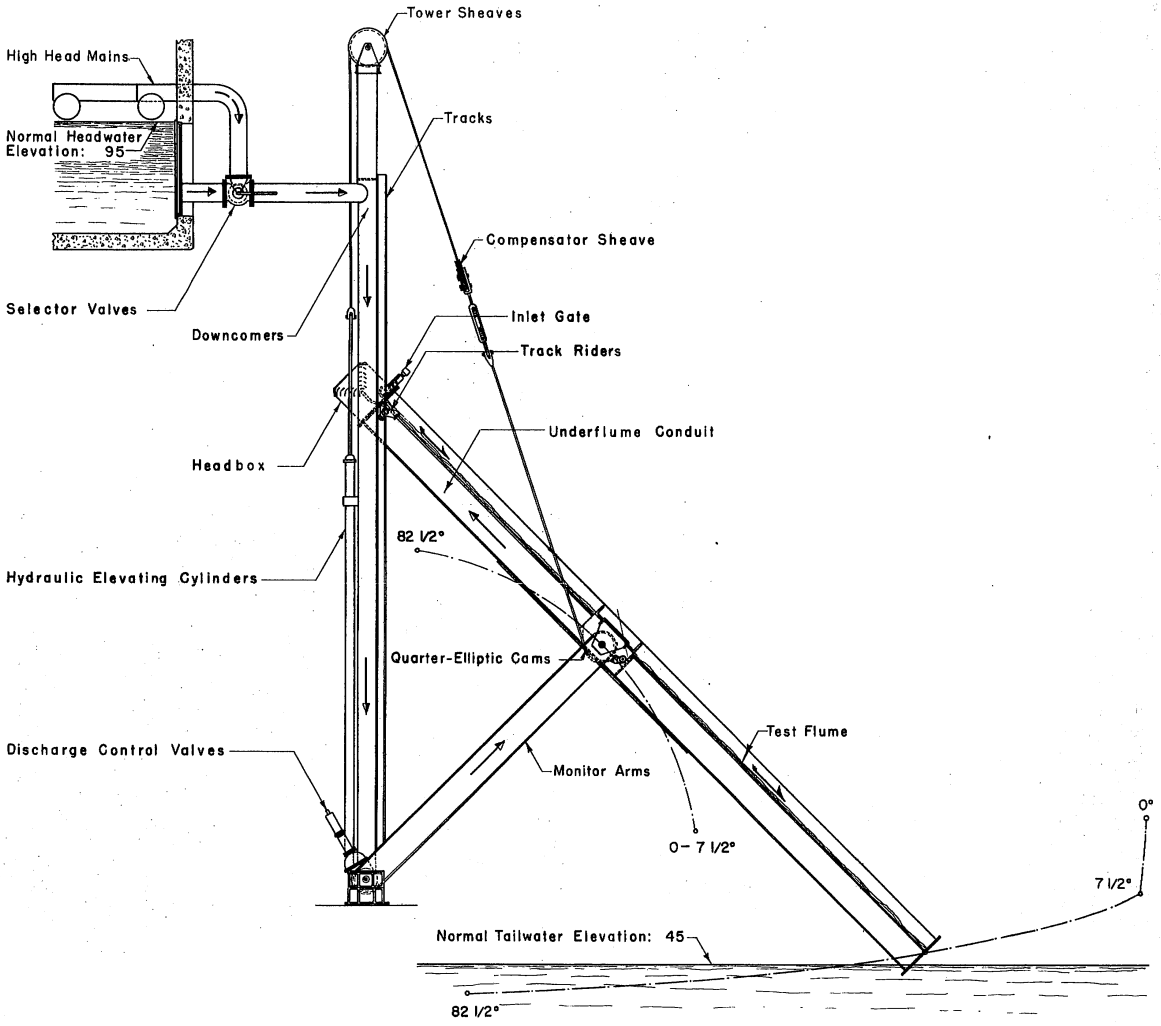

Fig. 4 - Channel Layout with Flume at 45° Slope

Flow Directions Shown by Arrows and Flume Movement
Illustrated with Dashed Lines

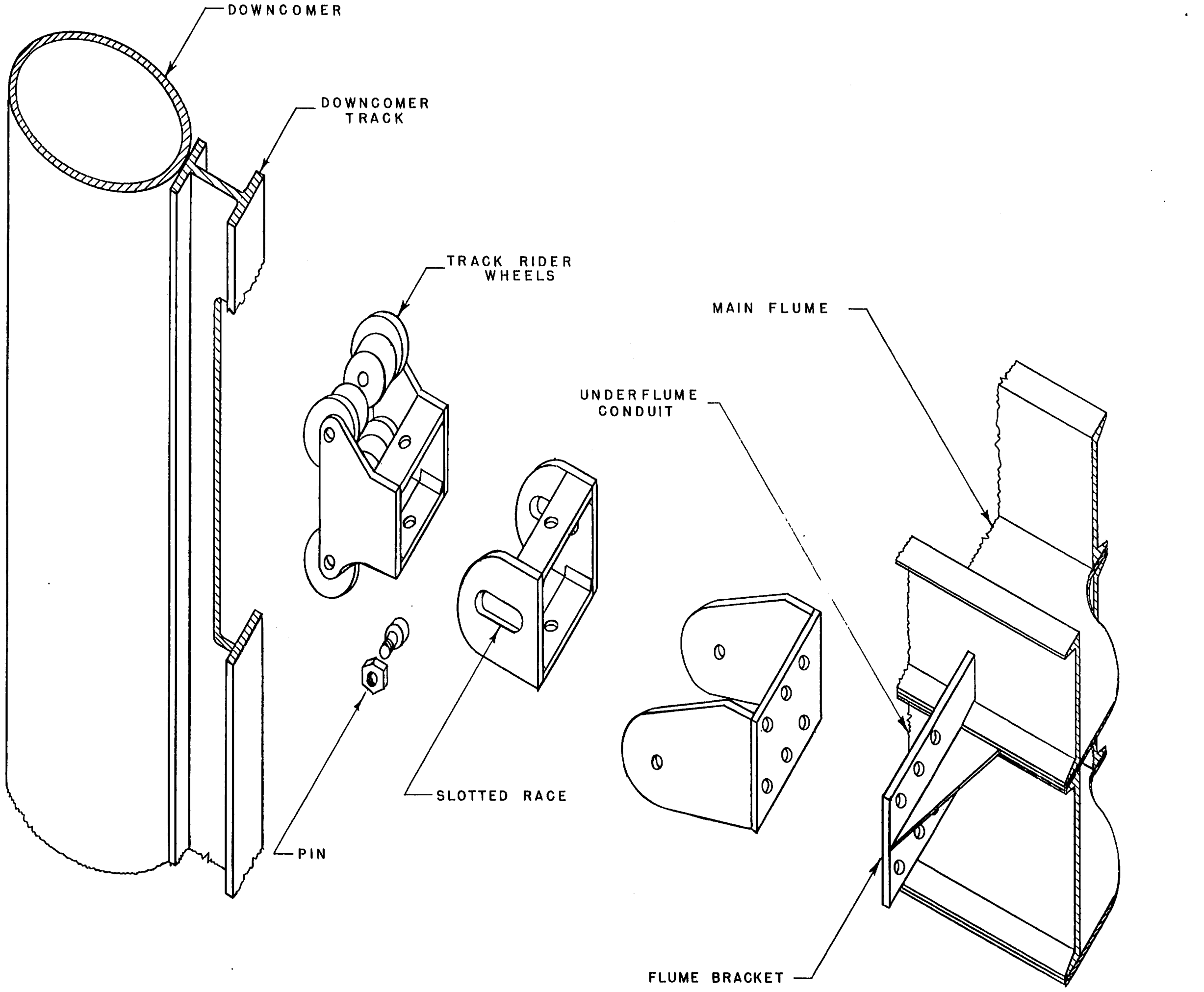

Fig. 5 - Track Rider Assembly

Pin and Gimbal Arrangement Restrains Flume's Outward
Pull While Allowing Freedom of Movement During Slope Changes

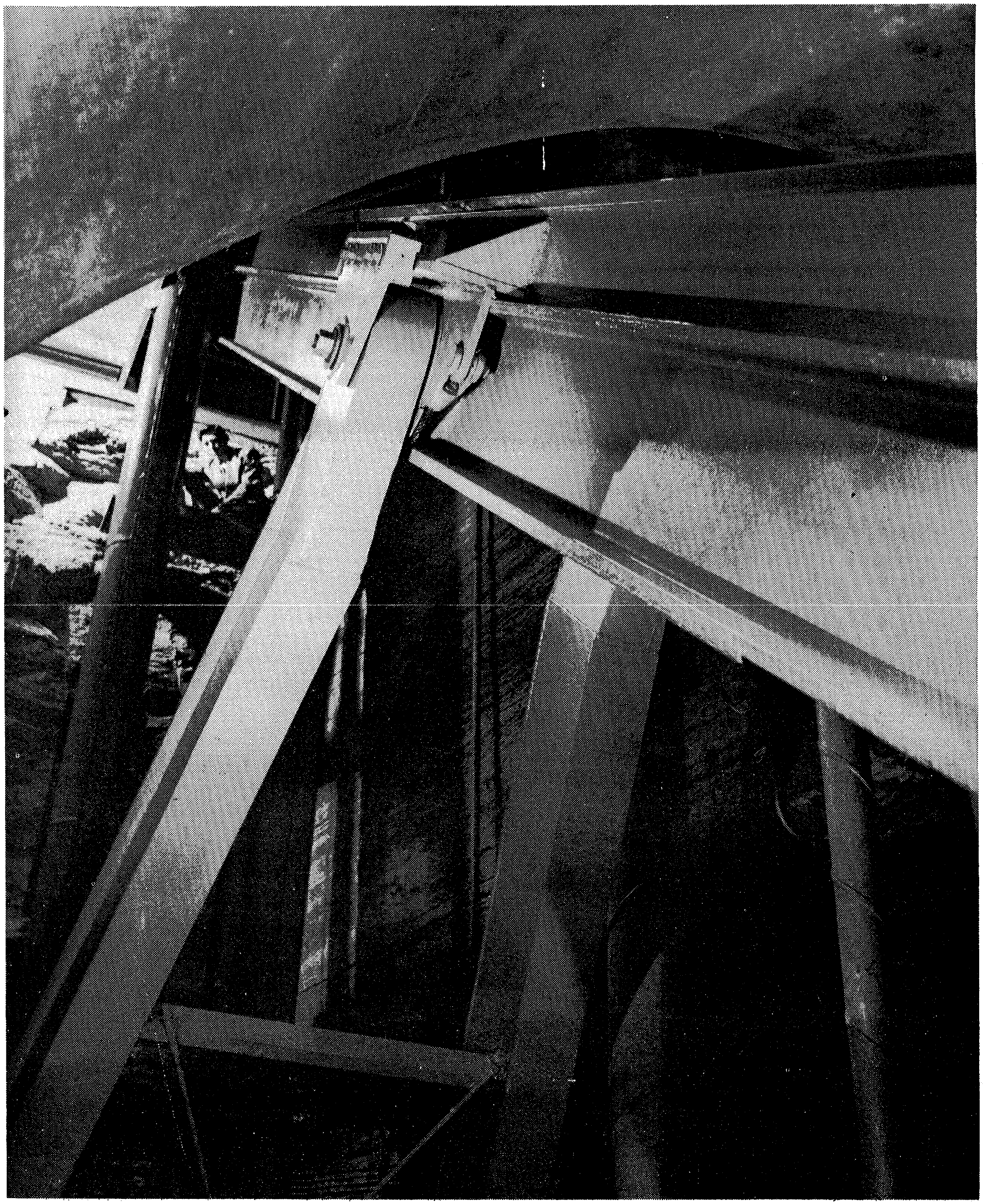

Fig. 6 – Junction of Monitor Arms and Flume Body

7/8-in. Support Cables Pass Around Quarter-Elliptic Cams
and Are Attached to Flume Body with Clevis

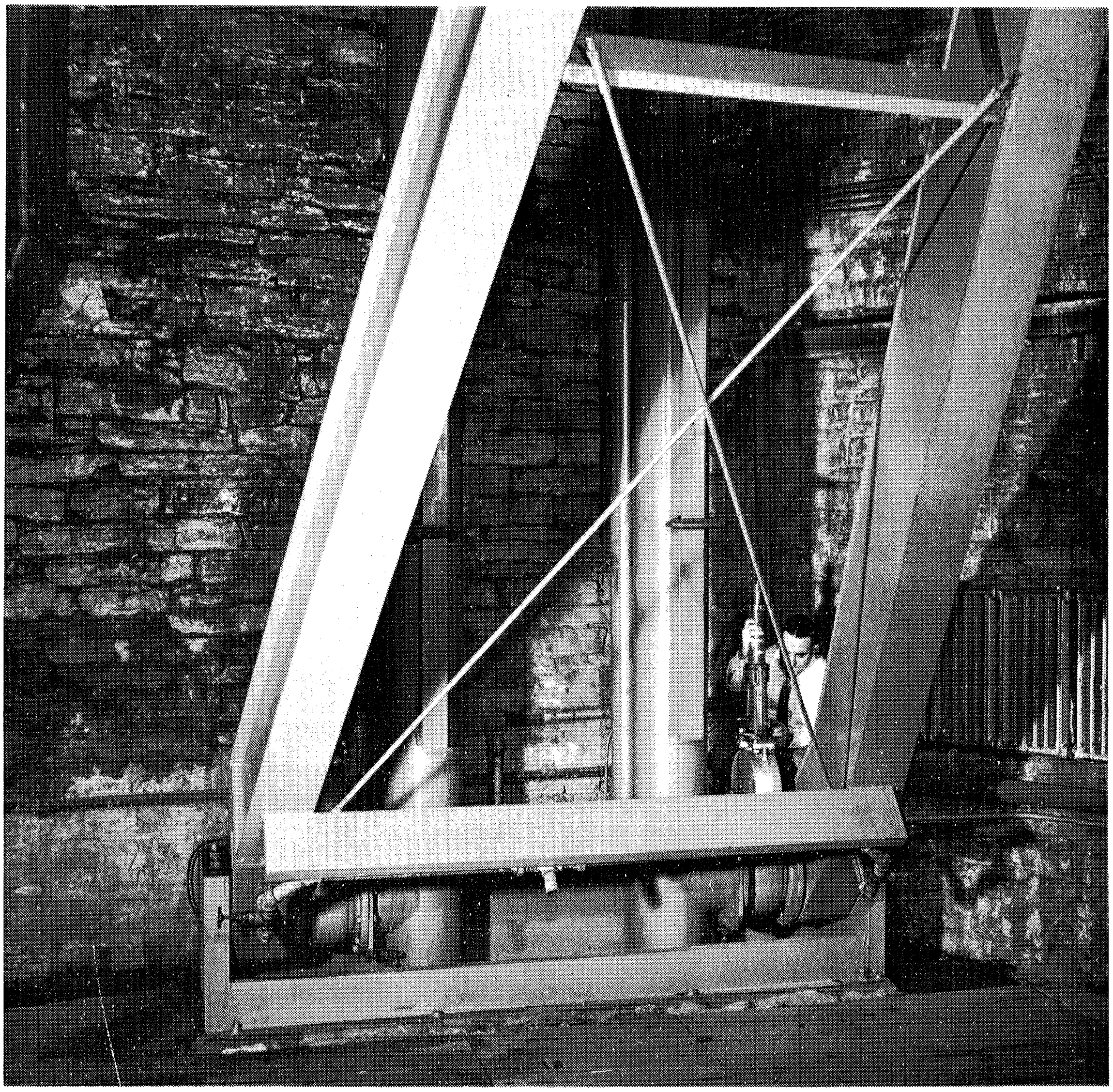

Fig. 7 - Base of Structure

Hydraulically Operated Gate Valves in Offset Between
Downcomers and Monitor Arms Furnish Main Control of Water Discharge

Fig. 8 - Structure Before Attachment of Flume

Spacer Cylinder in Place Between Monitor Arms

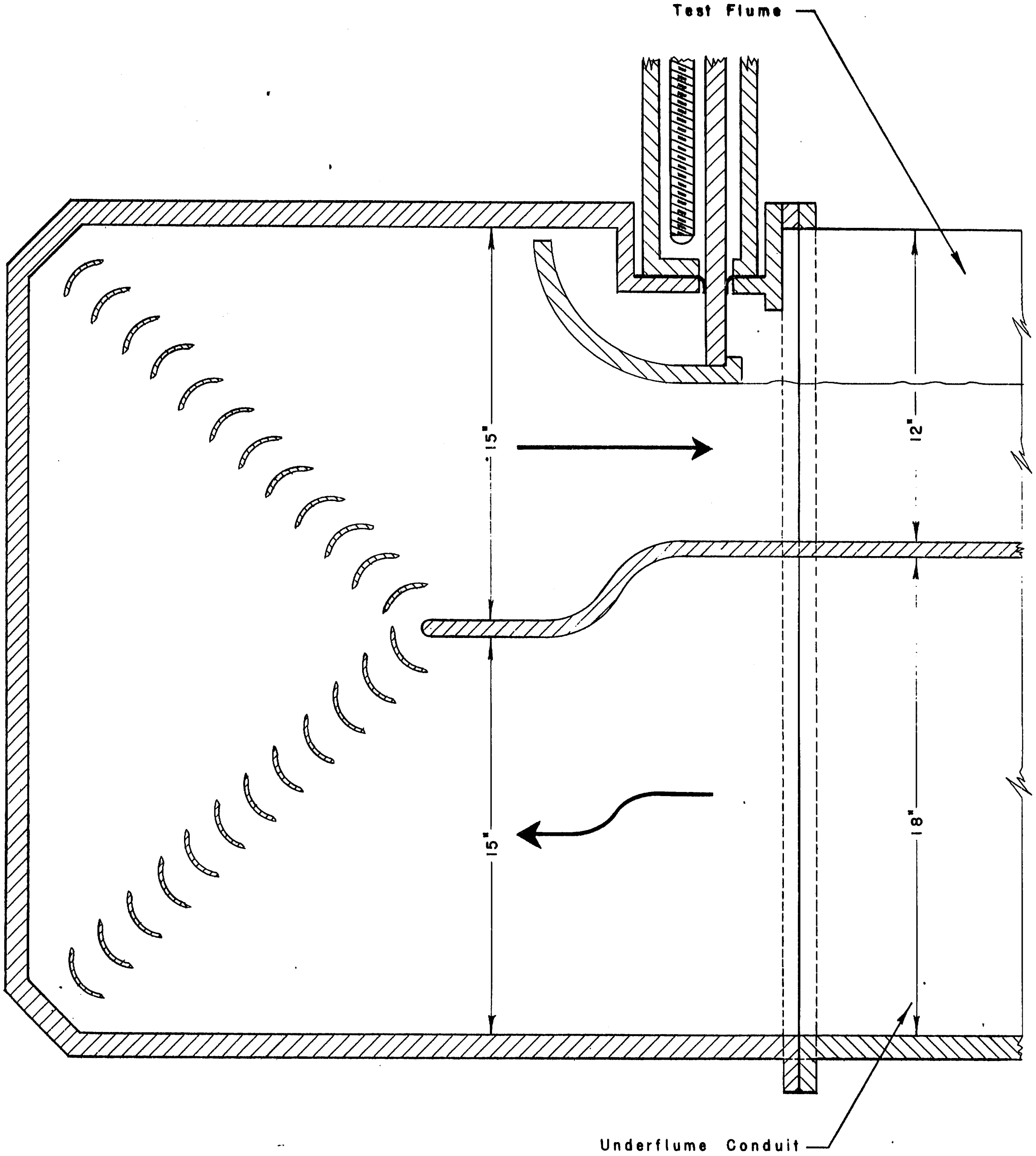

Fig. 4 – Channel Layout with Flume at 45° Slope

Flow Directions Shown by Arrows and Flume Movement
Illustrated with Dashed Lines

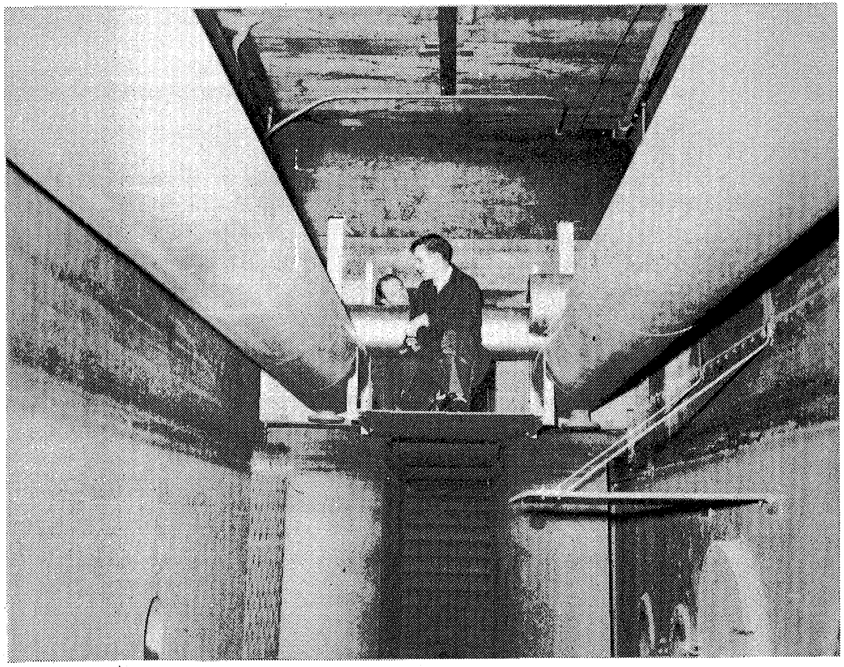

a) High-Head Supply Mains Inside Laboratory's
Main Supply Canal at Location of Offtakes to High-Velocity Channel

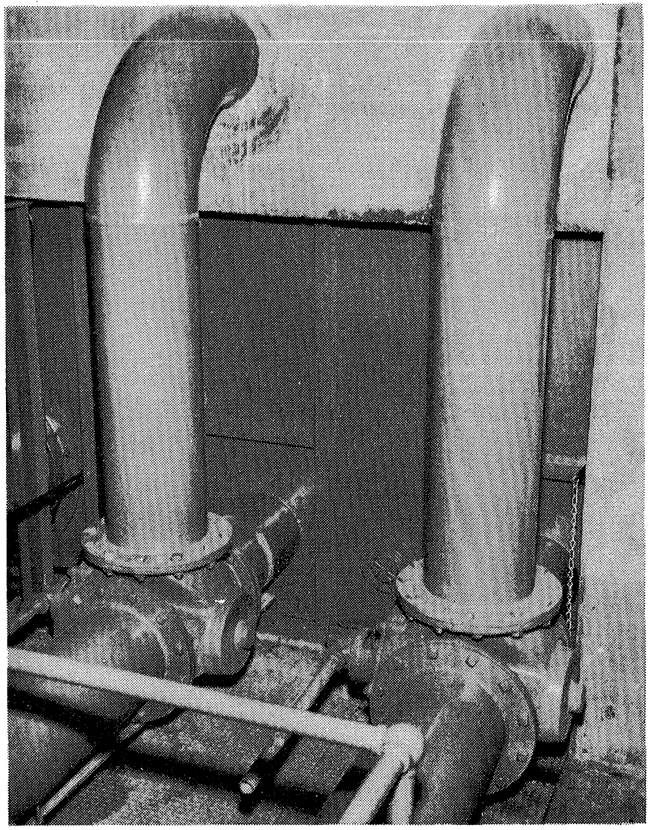

b) Selector Valves Control Source of Water Supply

Fig. 10 – Alternate Water Supply Sources for High-Velocity Channel

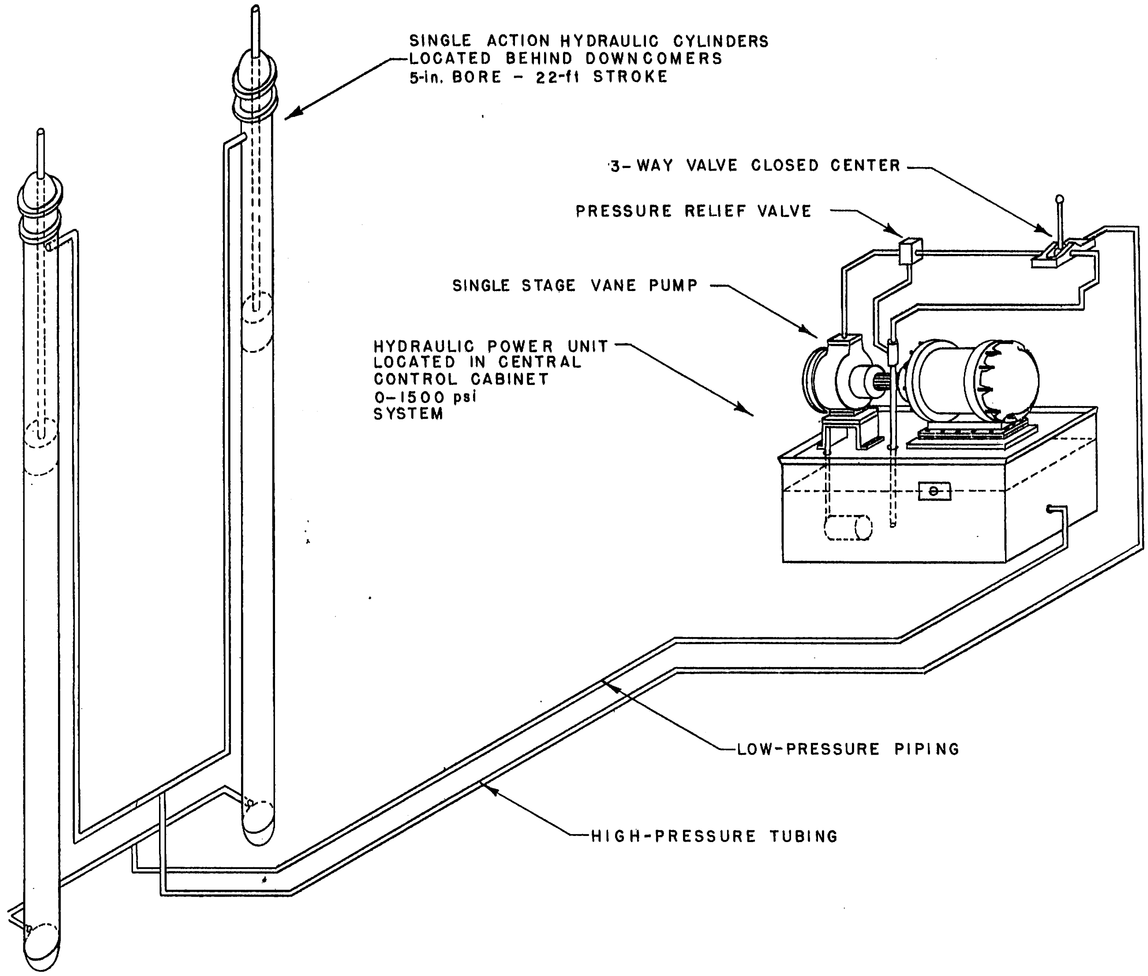

Fig. 11– Schematic of Hydraulic Slope–Control System

This System Used to Set All Flume Slopes Between 7-1/2° and 82-1/2°

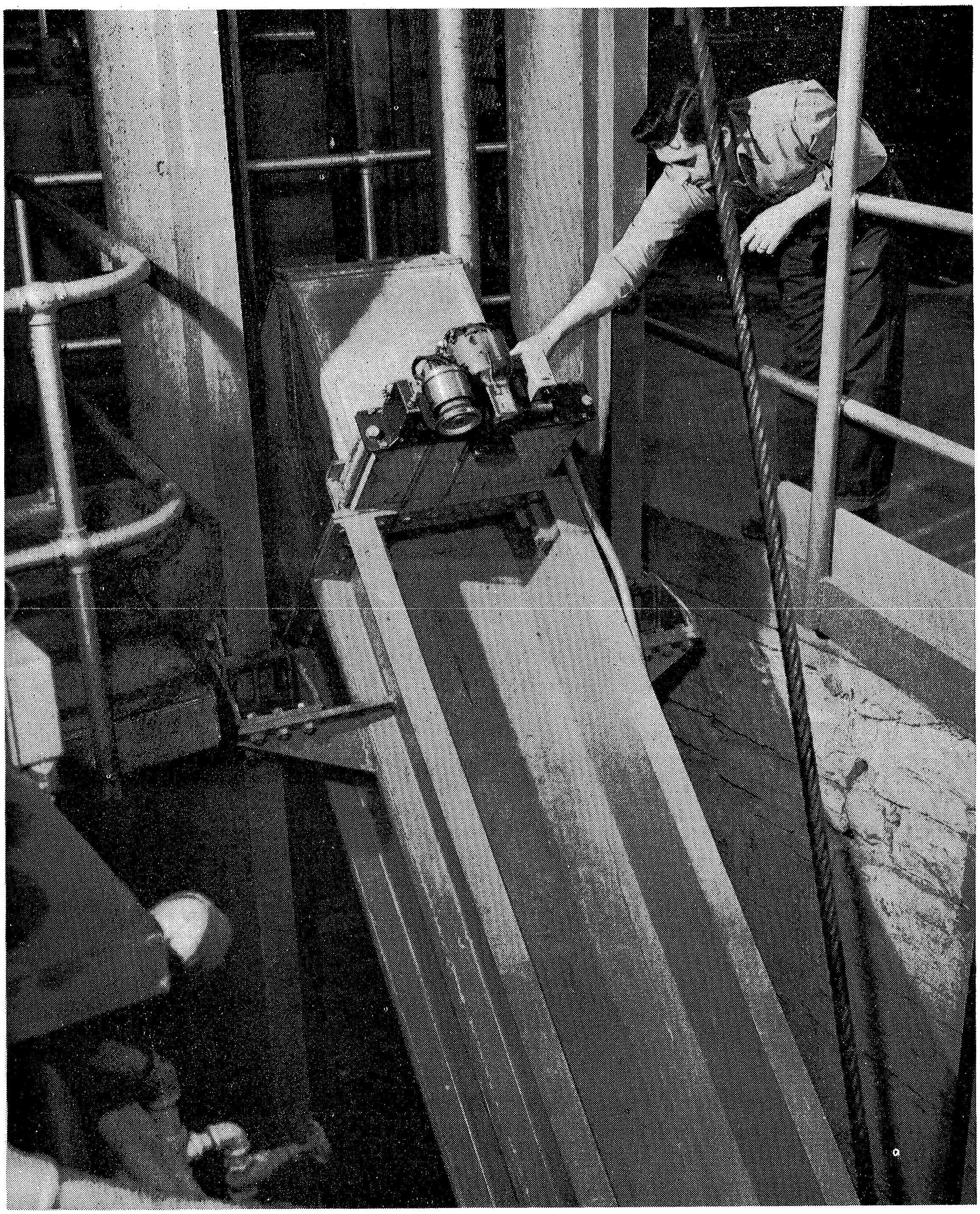

Fig. 12– Flume Inlet Region Showing Inlet Gate Controls

Gearmotor and Gate Opening Transmitter Mounted Atop Gatebox

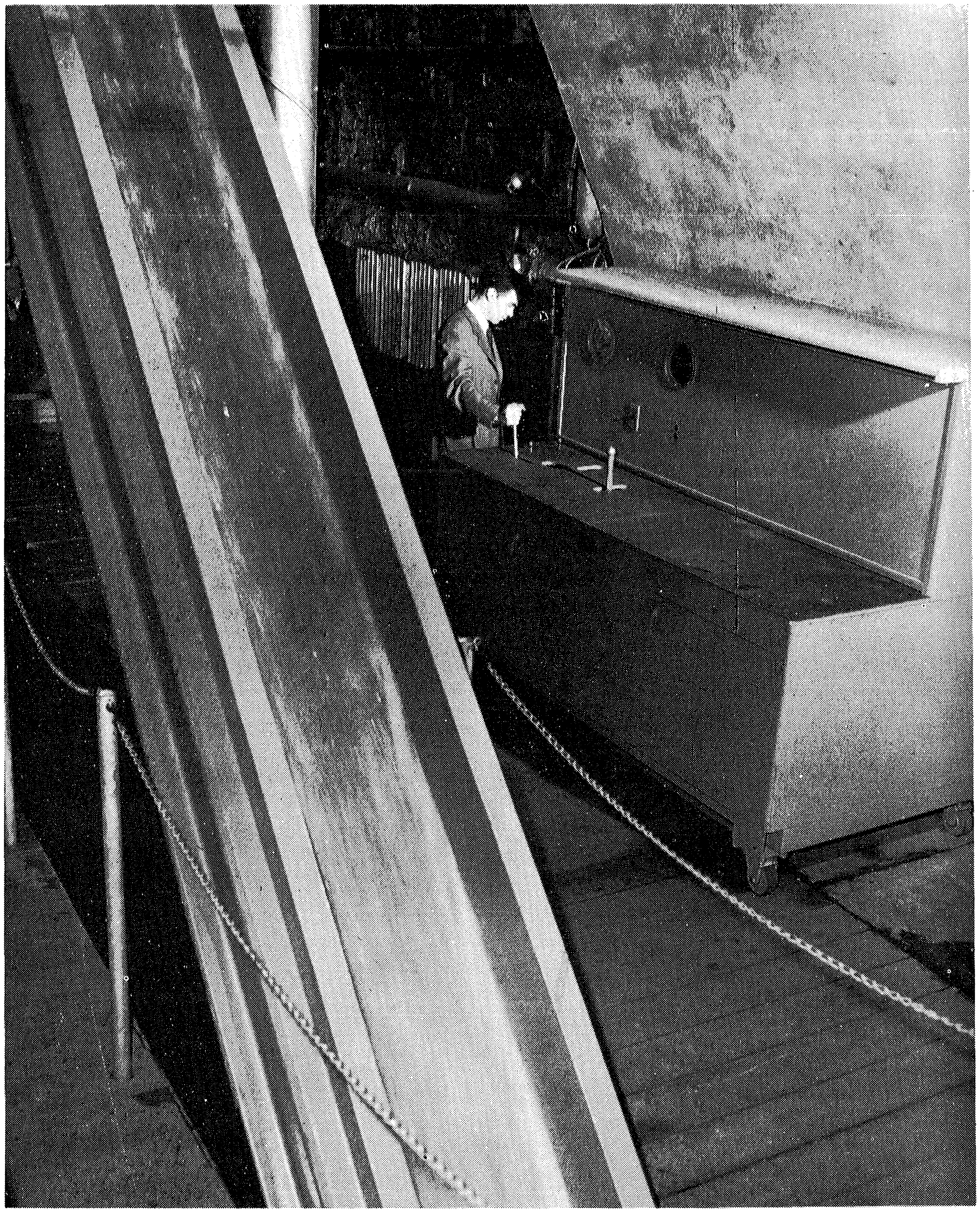

Fig. 13 – Control Cabinet for Channel

Control and Indication of Slope, Water Discharge, and Inlet Gate
Centered in this Cabinet

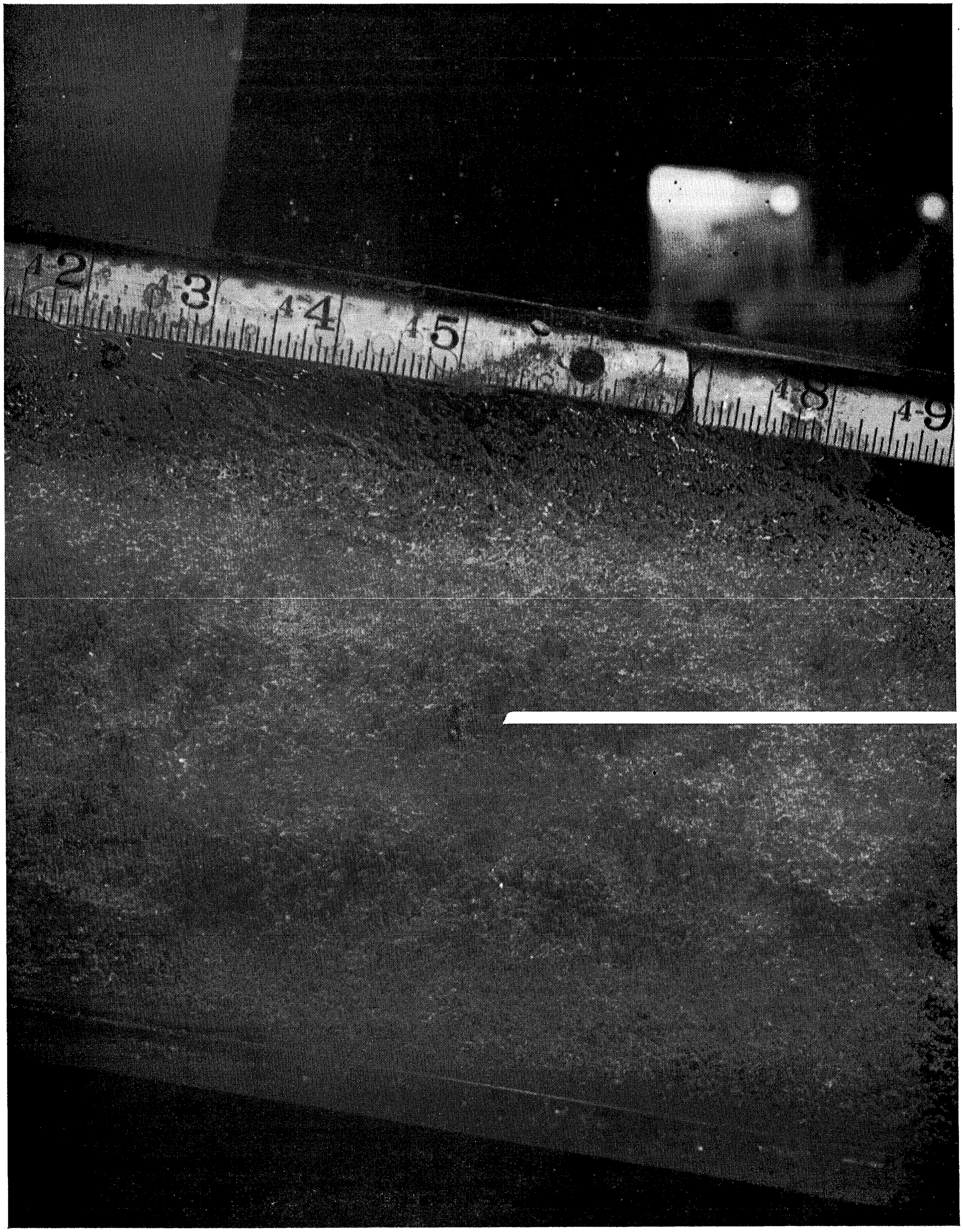

Fig. 14. PROFILE OF AERATED FLOW AT DOWNSTREAM END OF FLUME
Lucite Flume Extension Permits Selected Photographic Studies

Fig. 15. AERATED FLOW TAKEN FROM ABOVE AT 1/100,000 SEC EXPOSURE
Station Numbers Refer to Distance in Feet from Flume Inlet

DISTRIBUTION LIST FOR PROJECT REPORT NO. 34

of the St. Anthony Falls Hydraulic Laboratory

Copies	Organization
6	Office of Naval Research, Department of the Navy, Washington 25, D. C., Attn: Mechanics Branch (Code 438).
1	Commanding Officer, Branch Office, U. S. Navy Office of Naval Research, 495 Summer Street, Boston 10, Massachusetts.
1	Commanding Officer, Branch Office, U. S. Navy Office of Naval Research, 346 Broadway, New York 13, N. Y.
2	Commanding Officer, Branch Office, U. S. Navy Office of Naval Research, The John Crerar Library Building, Tenth Floor, 86 East Randolph Street, Chicago 1, Illinois.
1	Commanding Officer, Branch Office, U. S. Navy Office of Naval Research, 801 Donahue Street, San Francisco 24, California.
1	Commanding Officer, Branch Office, U. S. Navy Office of Naval Research, 1030 East Green Street, Pasadena 1, California.
2	Officer in Charge, U. S. Navy Office of Naval Research, Branch Office, Navy 100, F.P.O. New York, N. Y.
9	Director, Naval Research Laboratory, Office of Naval Research, Washington 25, D. C., Attn: Technical Information Officer.
1	Executive Secretary, Research and Development Board, The Pentagon, Washington 25, D. C.
1	Chief of Naval Operations, Washington 25, D. C., Attn: DONO (Air).
1	Librarian, U. S. Naval Postgraduate School, Monterey, California.
1	Bureau of Aeronautics, Department of the Navy, Washington 25, D. C., Attn: Director, Airborne Equipment Division.
1	Bureau of Aeronautics, Department of the Navy, Washington 25, D. C., Attn: Design Elements Division.
1	Bureau of Ordnance, Department of the Navy, Washington 25, D. C., Attn: Code Ad3.
1	Naval Ordnance Laboratory, White Oak, Silver Spring 19, Maryland, Attn: Commander.
1	Underwater Ordnance Department, U. S. Naval Ordnance Test Station, Pasadena Annex, 3202 East Foothill Boulevard, Pasadena 8, California.
1	Naval Torpedo Station, Newport, Rhode Island.

Copies	Organization
1	Bureau of Ships, Department of the Navy, Washington 25, D. C., Attn: Research Division
1	Bureau of Ships, Department of the Navy, Washington 25, D. C., Attn: Propeller and Shafting Branch.
6	David Taylor Model Basin, Washington 7, D. C., Attn: Hydromechanics Department.
1	Bureau of Yards and Docks, Department of the Navy, Washington 25, D. C., Attn: Research Division.
1	Underwater Sound Laboratory, Fort Trumbull, New London, Connecticut.
1	Waterways Experiment Station, Vicksburg, Mississippi.
1	Office of the Chief of Engineers, Gravelly Point, Virginia, Attn: Engineering Division.
1	Air Materiel Command, Wright-Patterson Air Force Base, Dayton, Ohio, Attn: Air Documents Division.
1	Director of Research, National Advisory Committee for Aeronautics, 1724 F Street, N. W., Washington 25, D. C.
1	Geological Survey, Department of the Interior, Washington 25, D. C., Attn: C. G. Paulsen, Chief Hydraulic Engineer.
1	Bureau of Reclamation, Denver, Colorado, Attn: I. A. Winter.
1	National Bureau of Standards, National Hydraulic Laboratory, Washington 25, D. C., Attn: H. N. Eaton.
1	Captain H. E. Saunders, 206 Maple Avenue, Takoma Park, Washington 12, D. C.
1	Columbia University, Department of Civil Engineering, New York 27, N. Y.
1	Illinois Institute of Technology, Department of Fundamental Mechanics Research, Chicago 16, Illinois, Attn: Dr. V. L. Streeter.
1	The Johns Hopkins University, Mechanical Engineering Department, Baltimore, Maryland, Attn: Dr. G. F. Wislicenus.
1	Massachusetts Institute of Technology, Department of Civil and Sanitary Engineering, Cambridge 39, Massachusetts, Attn: Dr. A. T. Ippen.
1	Massachusetts Institute of Technology, Department of Naval Architecture and Marine Engineering, Cambridge 39, Massachusetts, Attn: Admiral E. L. Cochrane.

Copies	Organization
1	University of Michigan, Engineering Mechanics Department, Ann Arbor, Michigan, Attn: Prof. R. A. Dodge.
1	University of Minnesota, St. Anthony Falls Hydraulic Laboratory, Minneapolis 14, Minnesota, Attn: Dr. L. G. Straub.
1	Northwestern University, Department of Civil Engineering, Evanston, Illinois, Attn: Prof. W. S. Hamilton.
1	University of Notre Dame, College of Engineering, Notre Dame, Indiana, Attn: Dean K. E. Schoenherr.
1	The Pennsylvania State College, School of Engineering, Ordnance Research Laboratory, State College, Pennsylvania.
1	University of Southern California, Department of Physics, Los Angeles, California, Attn: Dr. R. E. Vollrath.
1	Stanford University, Department of Civil Engineering, Stanford, California, Attn: Prof. J. K. Vennard.
1	University of Tennessee, Engineering Experiment Station, Knoxville, Tennessee, Attn: Dr. G. H. Hickox.
1	Woods Hole Oceanographic Institute, Woods Hole, Massachusetts, Attn: Dr. Columbus Iselin.
1	Worcester Polytechnic Institute, Alden Hydraulic Laboratory, Worcester, Massachusetts, Attn: Prof. L. J. Hooper.
1	Kimberly Clark Corporation, Research and Development Laboratories, Neenah, Wisconsin, Attn: C. A. Lee.
1	Library, California Institute of Technology, Pasadena 4, California.
1	Engineering Societies Library, 29 West 39th Street, New York, N. Y.
1	John Crerar Library, Chicago 1, Illinois.
1	Library, Massachusetts Institute of Technology, Cambridge 39, Massachusetts.
1	Polytechnic Institute of Brooklyn, 99 Livingston Street, Brooklyn 2, New York, Attn: Dr. L. Meyerhoff.
1	Library, University of Texas, Austin, Texas.
1	Dr. E. Cooper, Chairman, Underwater Ordnance Department, Naval Ordnance Test Station, 3202 East Foothill Boulevard, Pasadena 8, California.
1	Dean M. P. O'Brien, School of Engineering, University of California, Berkeley 4, California.

Copies	Organization
1	Prof. G. Birkhoff, Department of Mathematics, Harvard University, 21 Vanserg Building, Cambridge 38, Massachusetts.
1	Dr. F. H. Clauser, Department of Aeronautics, The Johns Hopkins University, Baltimore 18, Maryland.
1	Dr. J. W. Daily, Department of Civil and Sanitary Engineering, Massachusetts Institute of Technology, Cambridge 39, Massachusetts.
1	Dr. K. S. M. Davidson, Experimental Towing Tank, Stevens Institute of Technology, 711 Hudson Street, Hoboken, New Jersey.
1	P. Eisenberg, Hydromechanics Department, David Taylor Model Basin, Washington 7, D. C.
1	Dr. R. T. Knapp, Hydrodynamics Laboratories, California Institute of Technology, 1201 East California Street, Pasadena 4, California.
1	Dr. F. A. Maxfield, Bureau of Ordnance (Code Re6a), Department of the Navy, Washington 25, D. C.
1	Dr. J. H. McMillen, Naval Ordnance Laboratory, White Oak, Silver Spring 19, Maryland.
1	Dr. A. Miller, Bureau of Ordnance (Code Re3d), Department of the Navy, Washington 25, D. C.
1	Dr. J. M. Robertson, Ordnance Research Laboratory, The Pennsylvania State College, State College, Pennsylvania.
1	Dr. H. Rouse, Iowa Institute of Hydraulic Research, State University of Iowa, Iowa City, Iowa.
1	Dr. J. H. Wayland, Department of Applied Mechanics, California Institute of Technology, 1201 East California Street, Pasadena 4, California.
3	Serials Division, Library, University of Minnesota, Minneapolis 14, Minnesota.

(Reference: ONR ltr. ONR:438:EH, NR-062-052 of October 31, 1950, to Director, St. Anthony Falls Hydraulic Laboratory.)